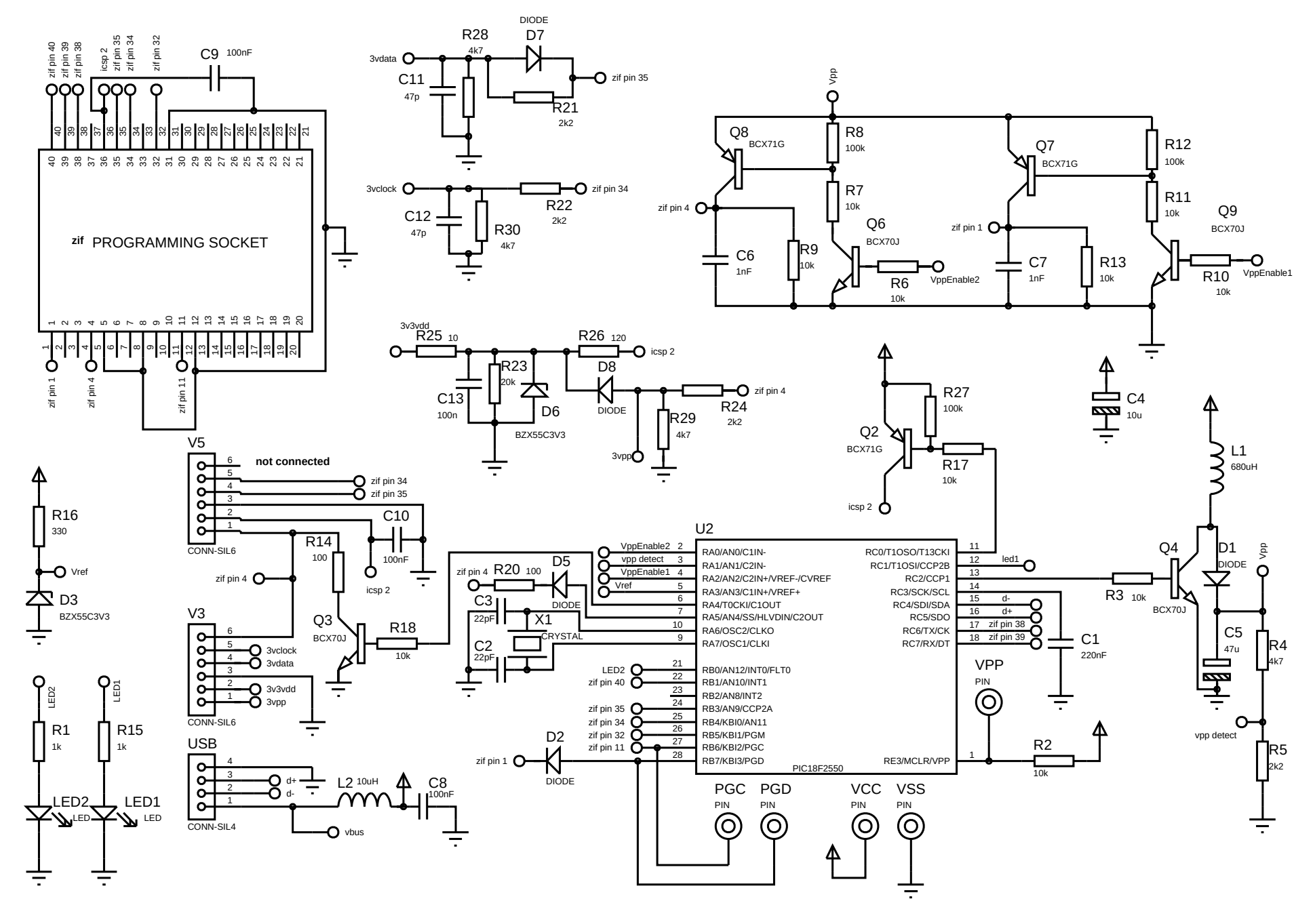

zif PROGRAMMING SOCKET
zif pin 40
zif pin 39
zif pin 38
icsp 2
zif pin 35
zif pin 34
zif pin 32
C9 100nF
zif pin 1
zif pin 4
zif pin 11
3vdata
R28 4k7
DIODE D7
C11 47p
zif pin 35
R21 2k2
3vclock
C12 47p
R30 4k7
R22 2k2
zif pin 34
Vpp
Q8 BCX71G
R8 100k
R7 10k
Q6 BCX70J
R9 10k
C6 1nF
R6 10k
VppEnable2
Q7 BCX71G
R12 100k
R11 10k
Q9 BCX70J
R10 10k
VppEnable1
C7 1nF
R13 10k
3v3vdd
R25 10
R26 120
icsp 2
R23 20k
C13 100n
D6 BZX55C3V3
D8 DIODE
R29 4k7
R24 2k2
3vpp
R27 100k
Q2 BCX71G
R17 10k
C4 10u
L1 680uH
V5
not connected
CONN-SIL6
C10 100nF
R14 100
Q3 BCX70J
R18 10k
R16 330
Vref
D3 BZX55C3V3
V3
3vclock
3vdata
3v3vdd
3vpp
R20 100
D5 DIODE
C3 22pF
X1 CRYSTAL
C2 22pF
U2
VppEnable2
vpp detect
VppEnable1
Vref
RA0/AN0/C1IN-
RA1/AN1/C2IN-
RA2/AN2/C2IN+/VREF-/CVREF
RA3/AN3/C1IN+/VREF+
RA4/T0CKI/C1OUT
RA5/AN4/SS/HLVDIN/C2OUT
RA6/OSC2/CLKO
RA7/OSC1/CLKI
RB0/AN12/INT0/FLT0
RB1/AN10/INT1
RB2/AN8/INT2
RB3/AN9/CCP2A
RB4/KBI0/AN11
RB5/KBI1/PGM
RB6/KBI2/PGC
RB7/KBI3/PGD
RC0/T1OSO/T13CKI
RC1/T1OSI/CCP2B
RC2/CCP1
RC3/SCK/SCL
RC4/SDI/SDA
RC5/SDO
RC6/TX/CK
RC7/RX/DT
RE3/MCLR/VPP
PIC18F2550
led1
d-
d+
zif pin 38
zif pin 39
C1 220nF
VPP PIN
R2 10k
R3 10k
Q4 BCX70J
D1 DIODE
C5 47u
R4 4k7
R5 2k2
vpp detect
LED2
zif pin 40
zif pin 35
zif pin 34
zif pin 32
zif pin 11
D2 DIODE
zif pin 1
PGC PIN
PGD PIN
VCC PIN
VSS PIN
USB
CONN-SIL4
d+
d-
L2 10uH
C8 100nF
vbus
R1 1k
R15 1k
LED2 LED
LED1 LED